DUNAVOX

THE WINE COOLING EXPERT

DUNAVOX SOUL-49

DAVS-49.116DB, DSS

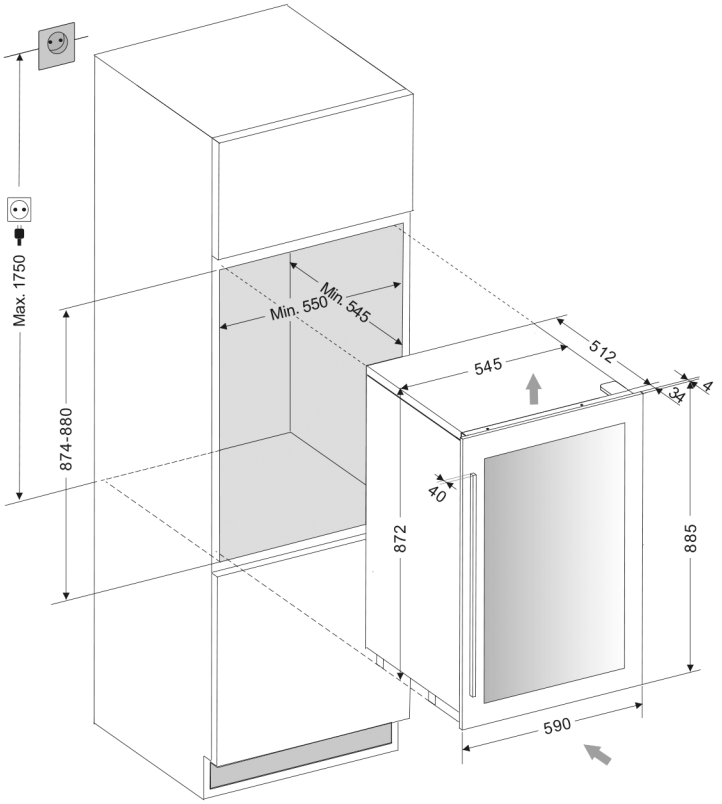

Front View

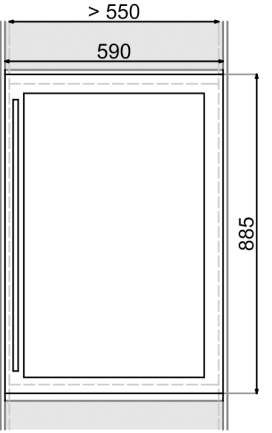

Side View

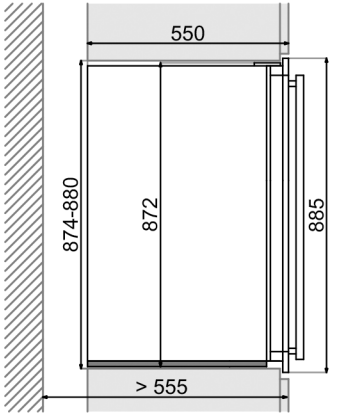

Top View

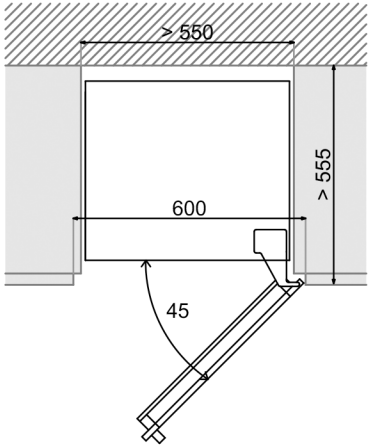

Remove

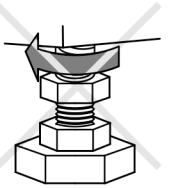

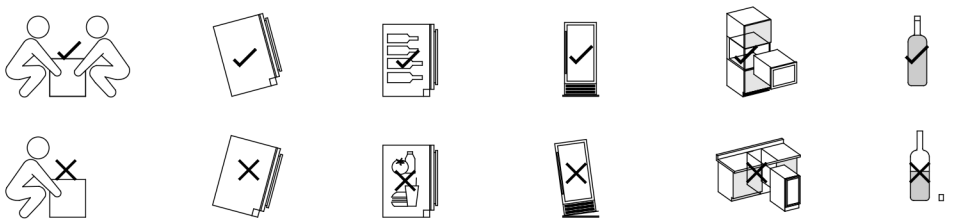

2021.V.1 Copyright Dunavox Kft. All rights reserved. www.dunavox.com